International Regulation News Update

http://ww2.eagle.org/en/rules-and-resources/regulatory-news/regulatory-news.html

Maritime Safety Committee's 95th Session

3 to 12 June 2015

Regulatory Development	***Ship+ Application***
ADOPTED SOLAS REVISIONS *(pages 1 - 2)*	
Cargo tank venting arrangements	*New Oil Tankers*
Self-unloading bulk carriers	*All Bulk Carriers*
Power ventilation systems	*New Ships*
Intact Stability Code	*New Cargo Ships*
IGF CODE *(pages 2 - 4)*	*All Ships*
Scope of Application	
Additional Initiatives	
Significant Provisions of the Code	
Training Requirements	
APRROVED SOLAS REVISIONS *(pages 4 - 5)*	
Use of Butterfly Valves of Cargo Ships	*New Cargo Ships*
FSS Code Revisions	*New Cargo Ships*
ESP Code – Entry Into Enclosed Spaces	*All Oil Tankers and Bulk Carriers*
Watertight Door Access	*New Cargo Ships*
Stability during anchor-handling operation	*New Ships*
NEW PERFORMNCE STANDARDS *(pages 5 - 6)*	
Ventilation systems in ro-ro cargo spaces	*Cargo Ships*
Smoke Management Systems	*Passenger Ships*
Water-mist, -spray and -sprinkler systems	*All Ships*
UNIFIED INTERPRETATIONS *(pages 6 - 8)*	
Measurements Taken Under the Noise Code	*New Ships*
Fiber reinforced plastic gratings	*Tankers*
Insulation arrangements	*All Ships*
Insulation of Ro-Ro/Vehicle Space	*Cargo Ships*
RO-RO Space Means of Escape	*Cargo Ships*
Double Bottom Means of Escape	*All Ships*
Continuous Fire Shelter	*All Ships*
Machinery Space Means of Escape	*All Ships*
Periodic Cargo Tank Testing	*Tankers*
Oxygen content of inert gas	*Chemical Tankers*
Hatchway Treatment for Minimum Freeboard	*Cargo Ships*

(+ "ships" are all self-propelled vessels)

The IMO Maritime Safety Committee held its 95th session from 3 to 12 June 2015. The International Code for Gas Fueled Ships was adopted, as were a number of amendments to SOLAS that are expected to enter into force on 1 January 2017. Several new or revised performance standards and unified interpretations were also approved at this session.

ADOPTED SOLAS REVISIONS

Cargo tank venting arrangements

An amendment to SOLAS Chapter II-2 (contained in MSC.392(95)) will require new oil tankers constructed on/after 1 January 2017 to be provided with a secondary means of venting to allow full flow relief of cargo or inert gas vapors at all times including in the event of damage to, or inadvertent closing of, the primary means of venting. More specifically.

- *Isolating valves* - fitted in cargo tank venting arrangements that are combined with other cargo tanks are to be so arranged to permit the passage of large volumes of vapour, air or inert gas mixtures during cargo loading and ballasting, or during discharging operations;
- *Secondary means for pressure/vacuum relief* is required for a common venting system that is combined with other tanks, in the event of damage to, or inadvertent closing of, the required tank isolation valve arrangement noted above. Two options for compliance are specified: (1) a secondary means of venting capable of preventing over-pressure or under-pressure; or (2) pressure sensors fitted in each tank which are to be monitored and alarmed at the ship's cargo control room or the position from which cargo operations are normally carried out.
- *Openings for small flow by thermal variations* the requirement has been revised such that flammable vapors are to be released at least 6 m above the cargo tank deck (for free flow of vapor mixtures) or at least 2 m above the cargo tank deck provided the vent outlet is fitted with a type approved high-velocity device providing a rate of release of at least 30 m/s. Additionally, all openings are now to be located not less than 10 m measured horizontally from the nearest air intakes and openings to enclosed spaces containing a source of ignition These are the same requirements currently being applied to the passage of large volumes of flammable vapors, air or inert gas mixtures during cargo loading and ballasting, or during discharging.
- Previously, the release needed to be not less than 2 m above the cargo tank deck and 5 m from the nearest air intakes and openings to enclosed spaces containing a source of ignition.

Figure 1 shows, in red text, the additional requirements for a typical arrangement for a a common venting system that is combined with other tanks.

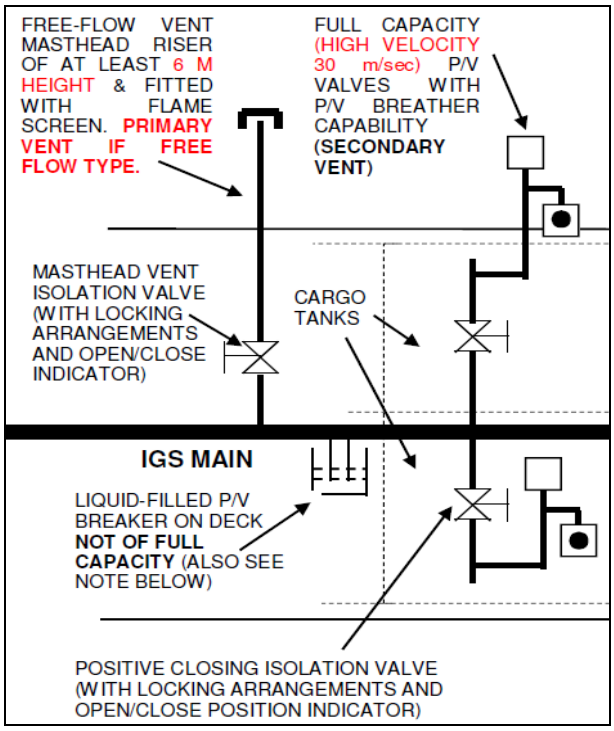

Figure 1 – Combined IG System

Self-unloading bulk carriers

The Committee adopted amendments to the mandatory provisions of Section 3 (Safety of personnel and ship) of the International Maritime Solid Bulk Cargoes (IMSBC) Code to provide interim fire safety measures for self-unloading bulk carriers.

The amendment (contained in MSC.393(95)) was developed taking into account the lack of regulations addressing the flammability of elements of the conveyor belt and the current assessment of fire detection technology in progress.

From 1 January 2017, the ship's crew shall conduct regular on board operational fire safety risk assessments of cargo handling areas on self-unloading bulk carriers with internally installed conveyor systems. The timing of the assessments should be defined by the Company in the Safety Management System of the ship.

For further information, contact ABS Regulatory Affairs at tel: 212-292-8806 | email: gshark@eagle.org

Power ventilation systems

Power ventilation systems serving vehicle, special category and ro-ro spaces on new passenger and cargo ships constructed on/after 1 January 2017 are required to deliver a specified number of air changes (6 or 10 air changes per hour depending on ship type and space served as specified in SOLAS) at all times when vehicles are in such spaces.

The new amendments to SOLAS Chapter II-2 (contained in MSC.392(95)) allow for a reduction in the number of air changes on ships constructred on/after 1 January 2017 if an air quality control system complying with the revised provisions adopted by the Committee (see New Performance Standards, below) is provided. Additionally, such ventilation systems, when fitted onboard passenger ships, are to be separate from other ventilation systems.

Intact Stability Code

The non-mandatory provisions of Chapter 6 under Part B of the 2008 Intact Stability Code were revised by the Committee (as per MSC.398(95)) to address the means to account for ice accretion on cargo ships carrying timber deck cargoes.

Three scenarios for ice loadings are to be assessed (see Figure 1, below).

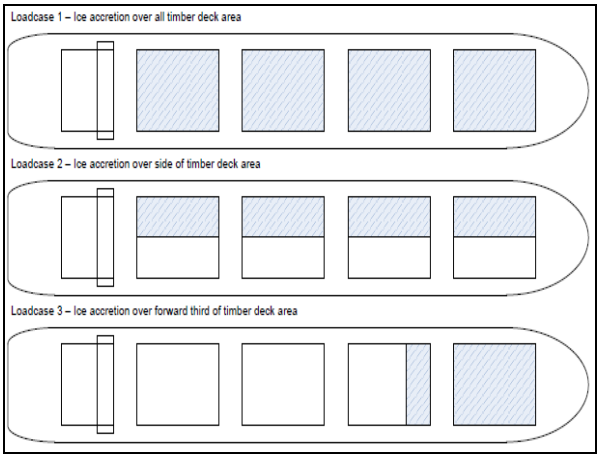

Figure 1 – Ice Loading Scenarios

IGF CODE

Scope of Application

The Committee adopted MSC.391(95) which contains amendments to SOLAS Chapter II-1, new Part G (as per MSC.392(95)) and the Code of Safety for Ships Using Gases or Other Low-Flashpoint Fuels, IGF Code.

The mandatory provisions of the Code will enter into force on 1 January 2017 and will apply to new cargo ships ≥ 500gt and passenger ships using low-flashpoint fuels (i.e. natural gas):

- with a building contract placed on or after 1 January 2017; or
- in the absence of a building contract, the keel of which is laid or which is at a similar stage of construction on or after 1 July 2017; and
- regardless of the building contract or keel laying date, the delivery is on or after 1 January 2021.

Ships which commence a conversion on/after 1 January 2017 to use low-flashpoint fuels or use additional or different low-flashpoint fuels other than those for which it was originally certified (e.g., certified under the Interim Guidelines specified in MSC285(86)), will need to comply with the IGF Code. The IGF Code does not apply to gas carriers using their cargo as fuel.

SOLAS regulation II-2/4 was also amended to allow existing ships that were approved to use oil fuels with a flashpoint less than 60℃ (for example, fuel oils not less than 43℃ for use in emergency generators) to continue using such oil fuels after the IGF Code comes into effect on 1 January 2017. This allowance is accepted provided that the ship is not converted to use low-flashpoint fuels, or does not commence the use of low-flashpoint fuels that are different from those which it was previously approved to use, after 1 January 2017.

Lastly, SOLAS Chapter II-1 Part F Regulation 55 was revised to account for the IGF Code requirement that ships using other low-flashpoint fuels (methanol, propane, butane, ethanol, hydrogen, dimethyl ether, etc.) need to comply with the functional requirements of the Code through the alternative design regulation based on an engineering analysis. However, operational methods or procedures as an alternative to a particular fitting, material, appliance, apparatus, piece of equipment, or type thereof which is prescribed by the Code are not permitted. Guidelines on alternative design and arrangements for SOLAS chapters II-1 and III are contained in MSC.1/Circ.1212. Guidelines for the approval of alternatives and equivalents as provided for in various IMO instruments are contained in MSC.1/Circ.1455.

For further information, contact ABS Regulatory Affairs at tel: 212-292-8806 | email: gshark@eagle.org

The Engineering Analysis is to be comprised of:

- Preliminary analysis in qualitative terms
- Development of casualty or operational scenarios
- Classification of Hazards
- Development of trial alternative designs
- Quantitative analysis against safety margins and prescriptive performance criteria.

Additional Initiatives

IMO is developing additional Part II of the IGF Code to provide detailed requirements for other specific low flashpoint fuels, such as propane, butane, ethanol, methanol, dimethyl ether and hydrogen. The basic concept of double barrier with ventilation/gas detection is expected to be applied for different low flashpoint fuels. Specific material compatibility issues and the challenges that things like toxicity may add will also be considered. It is most likely that any other fuels proposed for certain applications will have to apply the alternative design criteria and undertake risk assessment because marine experience is limited

Currently, low-flashpoint fuel means gaseous or liquid fuel having a flashpoint lower than 60°C. The Sub-committee on Carriage of Cargoes and Containers has been tasked to review the minimum flashpoint requirements for oil fuel after considering a proposal by the USA and Canada to lower it to 52°C.

The basis of the proposal is to achieve consistency with widely available automotive diesel fuels, in light of the SOx ECA requirements for use of fuel oils with a maximum sulphur content being reduced to 0.10% m/m as of 1 January 2015.

Significant provisions of the IGF Code

Significant provisions of the IGF Code include:

- *Risk assessment* –a risk assessment need only be conducted where specifically required by the applicable prescriptive parts of the IGF Code, e.g. sizing of drip trays, closed or semi-enclosed bunker stations, or fuel containment systems, etc. It is expected that this development will simplify the risk assessment process for ship designers looking to utilize natural gas as fuel. The risks shall be analyzed using acceptable and recognized risk analysis techniques. Loss of function, component damage, fire, explosion and electric shock shall as a minimum be considered. Risks which cannot be eliminated shall be mitigated as necessary. Details of risks, and the means by which they are mitigated, shall be documented to the satisfaction of the Administration or its recognized organization acting on its behalf.
- *Fuel system protection (deterministic)* – the IGF Code includes deterministic tank location criteria requiring that tanks are not to be located:
  - within B/5 or 11.5 m, whichever is less, from the side shell at the load line draft
  - closer to the side shell or aft terminal of the ship than B/10 for passenger ships and 0.8m to 2.0m depending on the gross design volume of the individual fuel tank at 20°C
  - within B/15 or 2.0 m, whichever is less, from of the bottom shell plating; and
  - within 8% of the ships length from the forward length of the ship.

  Fuel pipes are not to be located less than 800 mm from the ship's side. Single fuel supply systems are to be fully redundant and segregated so that a leakage in one system does not lead to an unacceptable loss of power.
- *Machinery spaces* – are to be either "gas safe" (a single failure cannot lead to release of fuel gas) or "ESD-protected" (in the event of an abnormal gas hazard, all non-safe equipment/ignition sources and machinery is automatically shutdown while equipment or machinery in use or active during these conditions is to be of a certified safe type). Engines for generating propulsion power and electric power shall be located in two or more machinery spaces.
- *Limit state design* - structural elements of the fuel containment system are to be evaluated with respect to possible failure modes taking into account the possibility of plastic deformation, buckling, fatigue and loss of liquid and gas tightness.
- *Fuel system protection (probabilistic)* – a probabilistic alternative to the deterministic protection is included in the Code. This alternative may permit tank location closer to the side shell with different acceptability threshold (f_{cn}) values for passenger and cargo ships of 0.02 and 0.04, respectively. The factor, f_{cn}, accounts for collision damages that may occur within a zone limited by the longitudinal projected boundaries of fuel tanks. Such fuel tanks may be located below accommodations subject to satisfactory risk assessment.

For further information, contact ABS Regulatory Affairs at tel: 212-292-8806 | email: gshark@eagle.org

- *Fuel piping in gas-safe machinery spaces* shall be completely enclosed by a double pipe or surrounded by an inerted duct or an under-pressurized duct ventilated at 30 air changes per hour (which may be reduced to 10 if the duct is auto-filled with nitrogen in the event gas is detected).
- *Hazardous areas* - the IGF Code applies IEC principles for the classification of hazardous areas (areas in which an explosive gas atmosphere are or may be expected to be present). The hazardous areas associated with tank relief valve vents are smaller than those in the IGC Code.
- *Air locks* - direct access between non-hazardous and hazardous spaces is prohibited except where necessary for operational reasons, through a mechanically ventilated air lock with self-closing doors. Such an air lock is also required for access between ESD-protected machinery spaces and other enclosed spaces.
- *Gas detection* – is extensively required throughout the ship including all ducts around fuel pipes, machinery spaces, all spaces containing fuel piping or other fuel equipment without ducting, airlocks and at ventilation inlets to accommodation and machinery spaces if required by the risk assessment.

Training Requirements

The Committee adopted MSC.391(95) which revises the STCW Convention by introducing new minimum requirements for the training and qualifications of masters, officers, ratings and other personnel on IGF Code ships.

- Seafarers responsible for designated safety duties associated with the care, use or emergency response to gas fuel are to hold a certificate in basic training for service on IGF Code certified ships. Seafarers who have been qualified and certified under the STCW Code for LNG tankers are considered as having met these requirements.
- Masters, engineering officers and all personnel with immediate responsibility for the care and use of gas fuels/systems are, in addition to the basic training addressed above, required to hold a certificate in advanced training and are to have completed at least one month of approved seagoing service that includes a minimum of three bunkering operations on board IGF Code certified ships.

APPROVED SOLAS AMENDMENTS

The following amendments to SOLAS and associated instruments were approved and, subject to adoption at MSC 96 in May 2016, the SOLAS amendments will enter into force (under IMO's new four-year cycle) on 1 January 2020 and apply to new ships constructed on/after this date.

Use of Butterfly Valves of Cargo Ships

After many years since the original proposal by IACS, the Committee approved revisions to SOLAS II-1/12 which allow an alternative to the screw down valve fitted to the liquid transfer pipe piercing the collision bulkhead on cargo ships (see Figure 2).

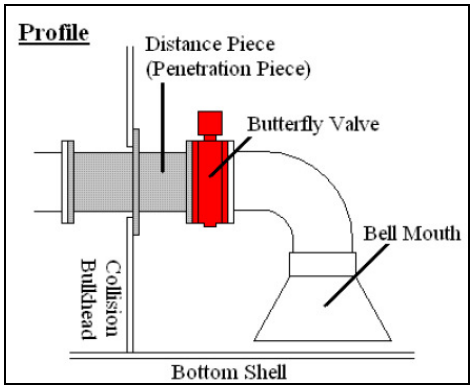

Figure 2 - Typical Butterfly Valve Arrangement

Such a pipe, dealing with fluid in the forepeak tank, may be fitted with a butterfly valve suitably supported by a seat or flanges and capable of being operated from above the freeboard deck.

FSS Code Revisions

The Committee approved a new Chapter 17 of the Fire Safety Systems (FSS) Code which contains specifications for foam firefighting appliances for the protection of designated helicopter landing areas on new ships and MODUs. Different arrangement options are specified for either helidecks or helicopter landing areas utilizing:

- at least two fixed foam monitors or deck integrated foam nozzles;
- two portable foam applicators; and/or
- two hose reel foam stations.

The specifications reflect those contained in MSC.1/Circ.1431 which will be revoked upon adoption of the new Chapter 17.

For further information, contact ABS Regulatory Affairs at tel: 212-292-8806 | email: gshark@eagle.org

ESP Code – Entry Into Enclosed Spaces

Draft amendments to the 2011 Enhanced Survey Program Code were approved, referring to the recommendations for entering enclosed spaces aboard ships set forth under resolution A.1050(27). The amendments promote safe access for surveyors by requiring a designated competent person to carry out a risk assessment and a test of the atmosphere of the enclosed space(s) to be surveyed where there may be an oxygen-deficient, oxygen-enriched, flammable and/or toxic atmosphere.

Persons entering enclosed spaces should be provided with calibrated and tested multi-gas detectors that monitor the levels of oxygen, carbon monoxide and other gases as appropriate. An attendant, suitably trained within the safety management system, is to maintain a watch over personnel entering the enclosed space, maintain communications with those inside the space and initiate the emergency procedures in the event of an incident occurring.

Watertight Door Access

The Committee approved draft revisions to SOLAS II-1/22, removing two of the provisions for determining when certain watertight doors may be permitted to remain open during navigation. Doors that needed to remain open for the safe and effective operation of the ship's machinery and to permit unrestricted access throughout the passenger area are no longer permitted under this regulation on the basis of current technologies for door operation.

The Committee also approved draft revisions to the guidance contained in MSC.1/Circ.1380 for determining which watertight doors on new passenger ships may be opened only if absolutely necessary during navigation. As a consequence, the previous four categories of doors permitted to be opened during navigation are reduced to three: (1) doors in the immediate vicinity of work being carried out; (2) doors to permit the passage of passengers or crew, and (3) doors that are urgently needed to be opened at the discretion of the master. These revisions will be formally circulated as a Circular after the revisions to SOLAS II-1/22 have been adopted.

Stability during anchor-handling operation

Draft amendments to the non-mandatory provisions of part B of the Intact Stability (IS) Code were approved applicable to vessels engaged in anchor-handling operations.

In addition to specifying a minimum stern freeboard during these operations, minimum thresholds are provided for the magnitude and area of the righting lever curve relative to the heeling lever curve caused by the vertical and horizontal components of the anchor-handling wire tension. A comprehensive operational plan should be developed which details the arrangement of anchor handling deck equipment (winches, wire stoppers, towing pins, etc.), data of the permissible tensions (see Figure 3) and includes typical arrangement of cargo on deck.

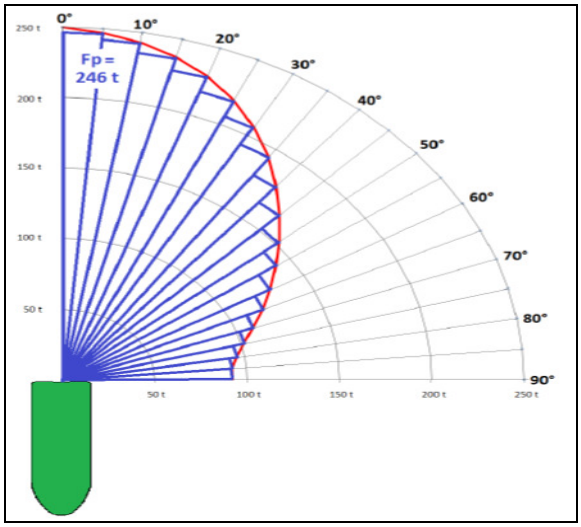

Fig. 3 – Permissible Tension Sector Diagram

NEW PERFORMANCE STANDARDS

The Committee approved several new or revised performance standards which are recommended to be used in conjunction with the application of SOLAS Chapter II-2 requirements as highlighted below.

Ventilation systems in ro-ro cargo spaces

Design guidelines, performance testing protocols and operational recommendations for ventilation systems fitted in ro-ro cargo spaces were revised as per new MSC.1/Circ.1515 (superseding MSC/Circ.729). While SOLAS Chapter II-2 provides prescriptive requirements for the rate of air change in such spaces, these guidelines address air quality management methods operating according to the principle of dilution ventilation to dilute gases generated by internal combustion engines by using exhaust and supply air ventilation.

The guidelines also contain recommendations for air quality control systems to ensure flammable and hazardous gas concentrations are kept below prescribed levels.

For further information, contact ABS Regulatory Affairs at tel: 212-292-8806 | email: gshark@eagle.org

Smoke Management Systems

Functional and system recommendations are provided in new MSC.1/Circ.1514 for assessing smoke management systems fitted onboard passenger ships. To facilitate safe evacuation of persons in case of fire by preventing the ingress of smoke into escape routes, these systems handle smoke movement such that the smoke is retained in the space of origin by using smoke barriers made of non-combustible material and/or pressure differentials. The system should be fully operational within 2 minutes after activation and be provided with at least two independent power sources.

Water-mist, -spray and -sprinkler systems

The guidelines for the maintenance and inspection of fire protection systems and appliances (MSC.1/Circ.1432) were revised and issued as MSC.1/Circ.1516. The revisions address the minimum recommended level of maintenance and inspections of these systems and focus on the testing of water quality in all piping sections. For each section where the water is refilled after being drained or flushed, water quality should meet manufacturer's guidelines. The Committee also approved an associated amendment to the FSS Code relative to the specification of water quality provided by the system manufacturer to prevent internal corrosion and clogging of sprinkler heads.

UNIFIED INTERPRETATIONS

The Committee approved several MSC Circulars containing Unified Interpretations on the following items.

Measurements Taken Under the Noise Code

Clarification is provided in new MSC.1/Circ.1509 on several matters under the new Code on Noise Levels on Board Ships. Noise levels for spaces not specifically called out for in the Code (e.g., recreation rooms and open recreation areas) are grouped with relevant spaces identified in the Code.

Additionally, the condition of the ship and equipment (e.g., ventilation grilles/louvres) is specified when taking measurements of noise levels. Also, the extent of acoustic insulation to be provided between accommodation spaces and various adjacent spaces is clarified.

Fiber reinforced plastic gratings

Conditions for use of fiber reinforced plastic gratings in providing safe access to tanker bows under SOLAS II-1/3-3 are clarified by new MSC.1/Circ.1504. Such gratings:

- are to have low-flame spread characteristics,
- should not generate excessive quantities of smoke and toxic products as per the International Code for Application of Fire Test Procedures; and
- should have adequate structural fire integrity as per recognized standards.

Insulation arrangements

Insulation arrangements for prevention of heat transmission at intersecting steel decks and/or bulkheads as contained in MSC/Circ.1120 were revised and issued in new MSC.1/Circ.1510. The revisions clarify that lining and steel coaming/gutter bars are applicable only for accommodation spaces which takes into account special arrangements to allow for drainage of accumulated water. As such, an insulated bulkhead arrangement with a 100mm undercut would be acceptable for steering gear spaces or engine rooms.

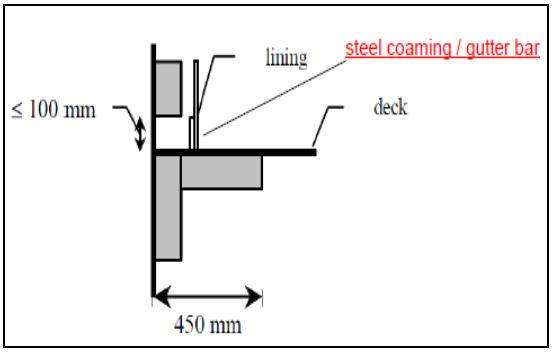

Fig. 4 – Insulation Arrangements

Insulation of Ro-Ro/Vehicle Space

Clarification is provided in new MSC.1/Circ.1511 with respect to the extent of insulation required for ventilation ducts and movable ramp systems serving those spaces. Movable ramps installed on decks which are insulated to "A-30" fire integrity and provide a boundary of single space protected by their own fire-extinguishing system are to be constructed of steel and insulated to "A-30" fire integrity.

An exception to these requirements is provided for the "working parts" of movable ramps (e.g. hydraulic cylinders, associated pipes and accessories) and members supporting such fittings which do not contribute to the structural strength of the boundary. Such movable ramps need not be subjected to fire testing.

For further information, contact ABS Regulatory Affairs at tel: 212-292-8806 | email: gshark@eagle.org

RO-RO Space Means of Escape

The requirement to provide two means of escape from ro-ro spaces where the crew are normally employed (e.g., during the loading and unloading of a ro-ro deck, or during their ro-ro deck inspections/patrols while the ship is underway) as per SOLAS II-2/13.6 is clarified by new MSC.1/Circ.1505.

One of the means of escape should be a stairway and the second escape may be a trunk or a stairway. The means of escape are to be located from the forward most and after most points of the ro-ro space by a distance no greater than the breadth of the ro-ro space.

Double Bottom Means of Access

Means of safe access to double-bottom spaces or to forward ballast tanks is clarified by new MSC.1/Circ.1507. Access may be from a pump-room, deep cofferdam, pipe tunnel, cargo hold, double-hull space or similar compartment not intended for the carriage of oil or hazardous cargoes.

The interpretation also clarifies that cargo holds carrying hazardous cargoes may be used for safe access, provided the recommendations for entering enclosed spaces aboard ships, as per resolution A.1050(27) – see above - is applied.

Continuous Fire Shelter

MSC.1/Circ.1511 provides clarification on the continuous fire shelter required as one of the two means of escape from main workshops in all machinery spaces and from machinery control rooms in a Category A machinery space arranged on ships constructed on or after 1 January 2016.

MSC.1/Circ.1511 includes several example illustrations of this continuous fire shelter which is to be arranged:

- to avoid entrance into the machinery space)
- to possess at least "A-0" class divisions and be protected by self-closing "A-0" class doors
- to have minimum internal dimensions of at least 800 mm x 800 mm for vertical trunks and 600 mm in width for horizontal trunks, and shall have emergency lighting provisions.

Machinery Space Means of Escape

MSC.1/Circ.1511 also clarifies the application of the 800mm x 800mm minimum internal dimensions for the enclosure required for the ladder providing one of the means of escape from machinery spaces in cargo and passenger ships. Two illustrations provide examples on the application of the required dimensions as shown in Figure 5.

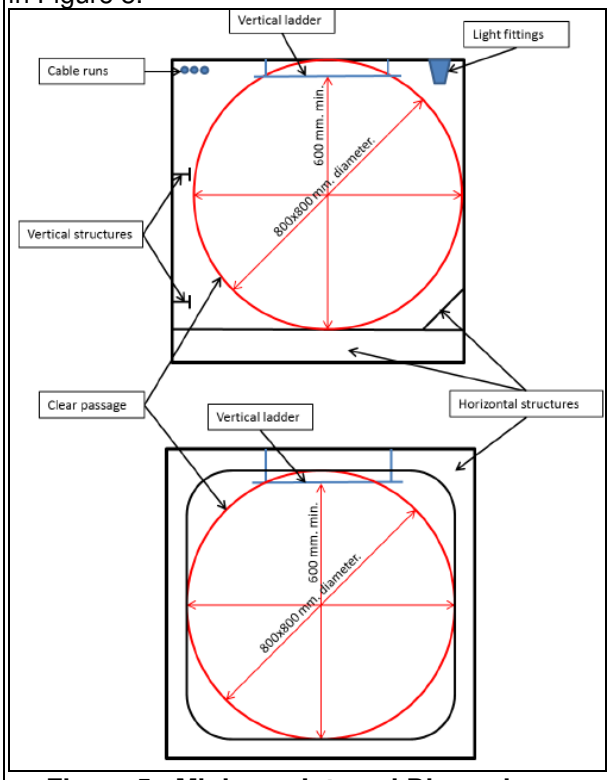

Figure 5 - Minimum Internal Dimensions

Periodic Cargo Tank Testing

A new MSC.1/Circ.1502 was approved which contains guidelines for the implementation of amendments of the Enhanced Program of Inspections during Surveys of Bulk Carriers and Oil Tankers (ESP Code) adopted in November 2014 by resolution MSC.381(94). The Guidance allows for cargo tank testing to be carried out by the vessel's crew under the direction of the master. Such testing may be accepted provided that:

- a tank testing procedure has been approved;
- there is no record of leakage, distortion or substantial corrosion;
- it is completed within 3 months of the overall or close up survey carried out by the Recognized Organization surveyor; and
- the condition of the tanks are found satisfactory by the surveyor.

The new Guidance provides the details of the report of the tank's condition, including any deficiencies, to be completed by the master, which is to be recorded in the ship's logbook and retained onboard.

Oxygen content of inert gas

The interpretation in new MSC.1/Circ.1501 allows for the oxygen content of inert gas to exceed the threshold as defined in, and allowed by, regulation 16 of SOLAS Chapter II-2 (5% by volume) for products containing an *oxygen-dependent inhibitor* (an additive which depends on oxygen to maintain the chemical composition or physical state of the product carried onboard a chemical tanker).

The oxygen content of inert gas is to be in accordance with the value specified by the additive's manufacturer in the Certificate of Protection as required by paragraph 15.13 of the IBC Code.

Hatchway Treatment for Minimum Freeboard

Under the Load Line Convention, *continuous hatchways* may be treated as a trunk, thereby providing for a reduction in freeboard. Depending on the total effective length of a trunk (including qualified continuous hatchways), a percent reduction in minimum freeboard is allowed. While it is clear that a single continuous hatchway falls under the application of regulation 36(6), MSC.1/Circ.1508 was developed to cover three scenarios as proposed by IACS.

- A single hatchway, if linked by weathertight decked steel structures should be treated separately as a trunk.
- Hatchways connected only by longitudinal coamings should not be considered as a *continuous hatchway*, but can be treated separately as a trunk in the freeboard computation.
- Hatchways fully connected by weathertight enclosed steel structures between them can use the volume of each hatchway and the weathertight space between them in the freeboard computation.

For further information, contact ABS Regulatory Affairs at tel: 212-292-8806 | email: gshark@eagle.org